more sensors, more solutions

PVA Series Parts Verification Array

Light screen for error proofing of bin-picking operations

Description and Suggested Applications

The Banner PVA Parts Verification Array is a simple, easy-to-use light screen suited to many part assembly and object detection applications.

The PVA has two components: an emitter and a receiver. The receiver's solid-state output easily interfaces to a system controller, which is pre-programmed by a supervisor for a specific sequence of tasks. Mounted so that the beams stretch across each bin in an assembler's work station, the PVA then signals the assembler (by means of easy-to-see job lights):

- Which of a matrix of bins contain items to be picked in a given operation; and
- In what order they should be picked.

As the assembler reaches into each bin, the system senses if the correct part has been taken, then signals the next bin in the sequence. The system may be wired to signal an alarm for the assembler and/or a supervisor in the event an incorrect part is selected.

The major benefit of a PVA-driven system is increased efficiency, due to simplified job training, increased quality control (no skipped components), and reduced rework and inspections. The PVA speeds the resumption of work after breaks and other distractions. And it is ideal for multilingual workplaces where communication may be an issue.

Features and Benefits

- Compact package size; only 30 mm wide x 15 mm deep (1.2" x .6"). Available in 4 lengths: 100 mm, 225 mm, 300 mm, 375 mm (4", 9", 12", 15") to fit many sizes and/or configurations of parts bins. (Works with the manufacturer's existing bins.)
- Two-component system (asynchronous emitter and receiver) needs no synch wire or controller box.
- Two LEDs on each emitter and receiver indicate proper setup and system errors.
- Both emitter and receiver have clearly visible green job indicator lights mounted on either side of the housing; the light can be remotely controlled to initiate user action with a solid or a blinking light.
- 2-frequency setting prevents crosstalk for multiple-array, close-proximity installations.
- Range is up to 2 m (6.5') for all models.
- Easy DIP-switch adjustments for light/dark operate, solid/flashing job light indicator, A/B frequency, and gate polarity for activating the job light indicator.
- Choose 2 m (6.5') unterminated cable or 2 m (6.5') cable with 4-pin Euro-style quick-disconnect connector.
- Choose PNP or NPN receiver output.
- 12-30V dc operation.
- Minimum resolution 35 mm (1.4") for all models.
- Wide beam pattern provides easy alignment.
- Emitters and receivers sold separately or in pairs for easy ordering.
- Heavy-duty protective brackets available

WARNING . . . Not To Be Used for Personnel Protection

Never use this product as a sensing device for personnel protection. Doing so could lead to serious injury or death.

This product does NOT include the self-checking redundant circuitry necessary to allow its use in personnel safety applications. A sensor failure or malfunction can cause either an energized or de-energized sensor output condition. Consult your current Banner Safety Products catalog for safety products which meet OSHA, ANSI and IEC standards for personnel protection.

Printed in USA 06/03 P/N 52088 Rev. D

PVA Series Parts Verification Array

Model Selection

Model Number	Description	Array	Cable*	Supply Voltage	Job Light Input**	Receiver Output	Minimum Resolution
PVA100N6 **PVA100N6E** **PVA100N6R**	Emitter/Receiver Pair Emitter Receiver	100 mm (4") Long, 5 Beams	2 m (6.5') Unterminated	12 to 30 V dc	0V dc	NPN (Sinking)	35 mm
PVA100P6 **PVA100P6E** **PVA100P6R**	Emitter/Receiver Pair Emitter Receiver				+5 to 30V dc	PNP (Sourcing)	
PVA100N6Q **PVA100N6EQ** **PVA100N6RQ**	Emitter/Receiver Pair Emitter Receiver		2 m (6.5') Euro-style Quick-disconnect		0V dc	NPN (Sinking)	
PVA100P6Q **PVA100P6EQ** **PVA100P6RQ**	Emitter/Receiver Pair Emitter Receiver				+5 to 30V dc	PNP (Sourcing)	
PVA225N6 **PVA225N6E** **PVA225N6R**	Emitter/Receiver Pair Emitter Receiver	225 mm (9") Long, 10 Beams	2 m (6.5') Unterminated	12 to 30 V dc	0V dc	NPN (Sinking)	35 mm
PVA225P6 **PVA225P6E** **PVA225P6R**	Emitter/Receiver Pair Emitter Receiver				+5 to 30V dc	PNP (Sourcing)	
PVA225N6Q **PVA225N6EQ** **PVA225N6RQ**	Emitter/Receiver Pair Emitter Receiver		2 m (6.5') Euro-style Quick-disconnect		0V dc	NPN (Sinking)	
PVA225P6Q **PVA225P6EQ** **PVA225P6RQ**	Emitter/Receiver Pair Emitter Receiver				+5 to 30V dc	PNP (Sourcing)	
PVA300N6 **PVA300N6E** **PVA300N6R**	Emitter/Receiver Pair Emitter Receiver	300 mm (12") Long, 13 Beams	2 m (6.5') Unterminated	12 to 30 V dc	0V dc	NPN (Sinking)	35 mm
PVA300P6 **PVA300P6E** **PVA300P6R**	Emitter/Receiver Pair Emitter Receiver				+5 to 30V dc	PNP (Sourcing)	
PVA300N6Q **PVA300N6EQ** **PVA300N6RQ**	Emitter/Receiver Pair Emitter Receiver		2 m (6.5') Euro-style Quick-disconnect		0V dc	NPN (Sinking)	
PVA300P6Q **PVA300P6EQ** **PVA300P6RQ**	Emitter/Receiver Pair Emitter Receiver				+5 to 30V dc	PNP (Sourcing)	
PVA375N6 **PVA375N6E** **PVA375N6R**	Emitter/Receiver Pair Emitter Receiver	375 mm (15") Long, 16 Beams	2 m (6.5') Unterminated	12 to 30 V dc	0V dc	NPN (Sinking)	35 mm
PVA375P6 **PVA375P6E** **PVA375P6R**	Emitter/Receiver Pair Emitter Receiver				+5 to 30V dc	PNP (Sourcing)	
PVA375N6Q **PVA375N6EQ** **PVA375N6RQ**	Emitter/Receiver Pair Emitter Receiver		2 m (6.5') Euro-style Quick-disconnect		0V dc	NPN (Sinking)	
PVA375P6Q **PVA375P6EQ** **PVA375P6RQ**	Emitter/Receiver Pair Emitter Receiver				+5 to 30V dc	PNP (Sourcing)	

NOTE: * Cable diameter is 3.3 mm (0.13") on all models.
** See programming information on page 7.

Parts Verfication Array Specifications

Supply Voltage and Current	12 to 30V dc (10% maximum ripple) at less than 62 mA for the emitter and 50 mA for the receiver (exclusive of load)
Supply Protection Circuitry	Protected against reverse polarity
Sensing Range	2 m (6.5') with 2x excess gain remaining
Sensing Height	100 mm (3.9"), 225 mm (8.9"), 300 mm (11.8"), or 375 mm (14.8"), depending on emitter and receiver models
Beam Spacing	25.0 mm (0.98")
Sensing Resolution	35 mm (1.4") minimum diameter
Output Configuration	Receivers have one solid-state dc output, programmable for light or dark operate: Models PVA...N6R have current sinking (NPN) open-collector transistor Models PVA...P6R have current sourcing (PNP) open-collector transistor
Output Rating	150 mA maximum **Off-state leakage** current less than 2 microamps **On-state saturation voltage** less than 1V dc at 10 mA and less than 1.5V dc at 100 mA
Output Protection Circuitry	Protected against false pulse at power-up and continuous overload or short circuit of outputs
Output Response Time	**Sensor Size** / **Standard** / **With Crosstalk from Adjacent Units** 100 mm / 20 ms / 30 ms 225 mm / 40 ms / 60 ms 300 mm / 52 ms / 78 ms 375 mm / 64 ms / 96 ms
Status Indicators	**Emitter**: One green LED to indicate power ON/OFF One red LED to indicate frequency selected **Receiver**: One green LED to indicate power ON/OFF One yellow LED to indicate output state **Emitter and receiver:** Both have two highly visible "job lights" which are turned ON and OFF by applying an external signal to the white wire (see page 6). The job lights may be programmed for steady or flashing green (see page 7).
Construction	Black painted aluminum housing; acrylic lenses; Valox® end caps; thermoplastic elastomer programming switch cover; stainless steel mounting brackets and hardware
Environmental Rating	NEMA 2; IEC IP62
Connections	**Emitter**: 3-conductor PVC-jacketed 2 m (6.5') cable which is either unterminated or terminated with a 4-pin Euro-style quick-disconnect connector, depending on model (see model selection chart, page 2). Cable diameter is 3.3 mm (0.13"). **Receiver**: 4-conductor PVC-jacketed 2 m (6.5') cable which is either unterminated or terminated with a 4-pin Euro-style quick-disconnect connector, depending on model (see model selection chart, page 2). Cable diameter is 3.3 mm (0.13").
Operating Temperature	0° to +50°C (+32° to 122°F)
Maximum Off-axis Misalignment	See Figure 4, page 5.
Certifications	CE

Dimensions

Emitter and Receiver

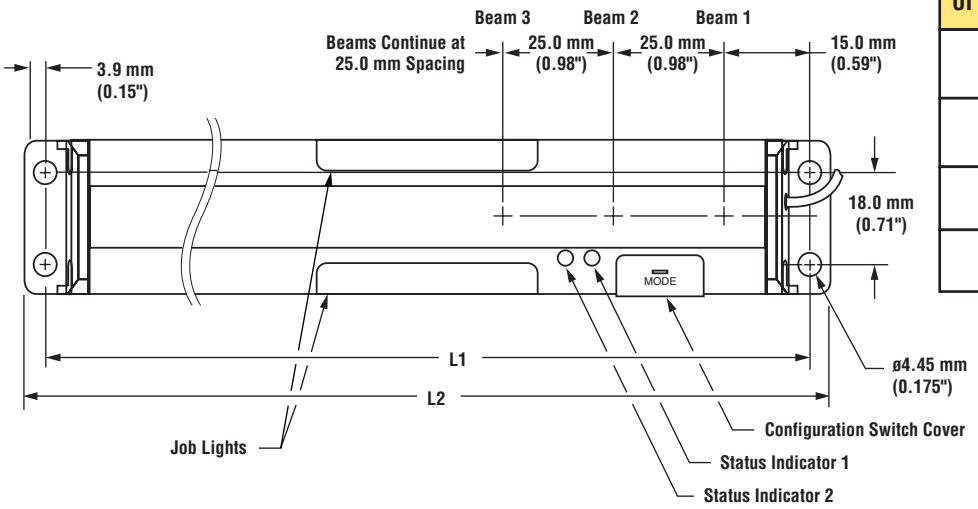

Number of beams	L1	L2
5	130.0 mm (5.12")	137.8 mm (5.43")
10	258.5 mm (10.18")	266.4 mm (10.49")
13	333.5 mm (13.13")	341.4 mm (13.44")
16	408.5 mm (16.09")	416.6 mm (16.40")

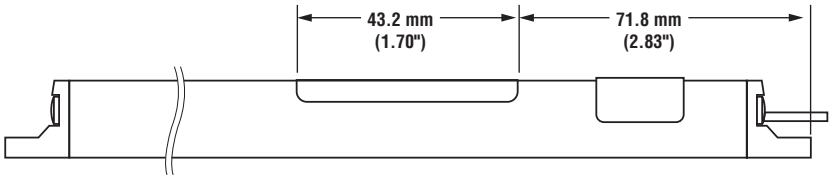

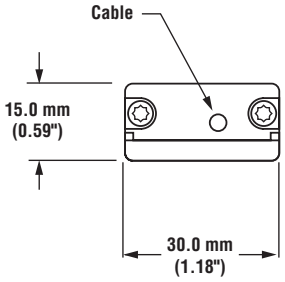

Bracket – 2 supplied with each sensor*

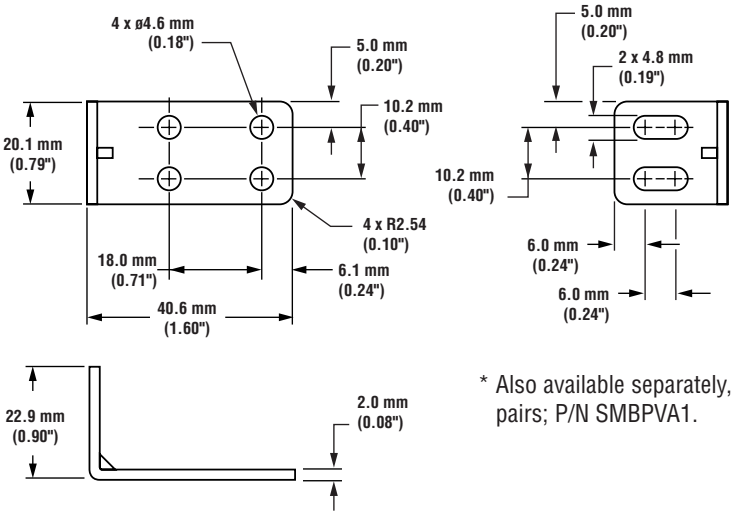

* Also available separately, in pairs; P/N SMBPVA1.

Hardware (included with each sensor)

P/N	Includes
50532	4 Stainless steel Phillips panhead machine screws (M4 x 0.7 x 12)
	4 Stainless steel hex nuts (M4 x 0.7)
	4 Stainless steel lock washers (M4 x 0.7)
	1 Plastic screwdriver (3.6 cm/1.4" long)

Figure 1. PVA sensor and bracket dimensions

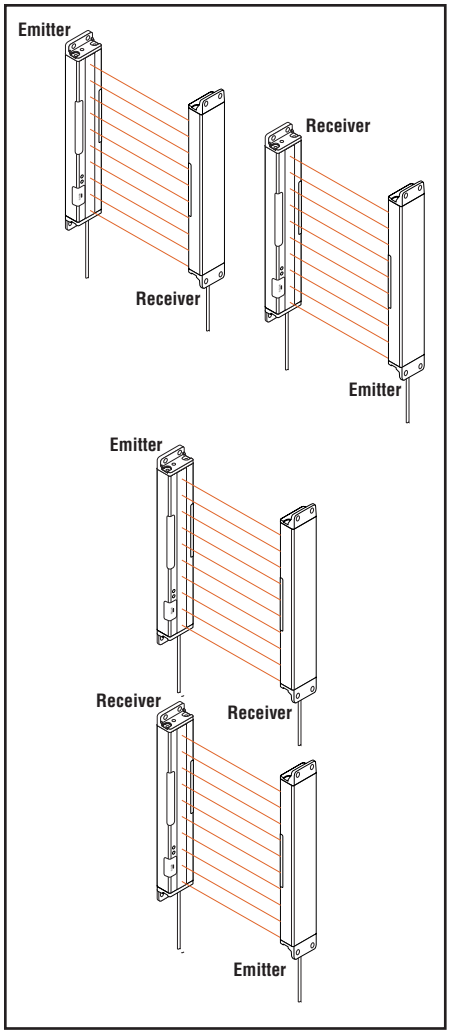

Figure 2. PVA installation: alternate multiple pairs of emitters and receivers to avoid crosstalk.

Installation

Positioning

When multiple pairs of sensors are mounted in a confined area, care must be taken to avoid crosstalk between the various sensor pairs. There are several ways to avoid crosstalk:

- Alternate the relative position of the emitters and receivers as shown in Figure 2.
- Alternate the programming of adjacent pairs, from Frequency A to Frequency B (see Programming, page 7).
- The effective maximum range of the PVA sensors is approximately 2 m (6.5'), so sensor pairs located farther than that from one another are unlikely to cause crosstalk problems.

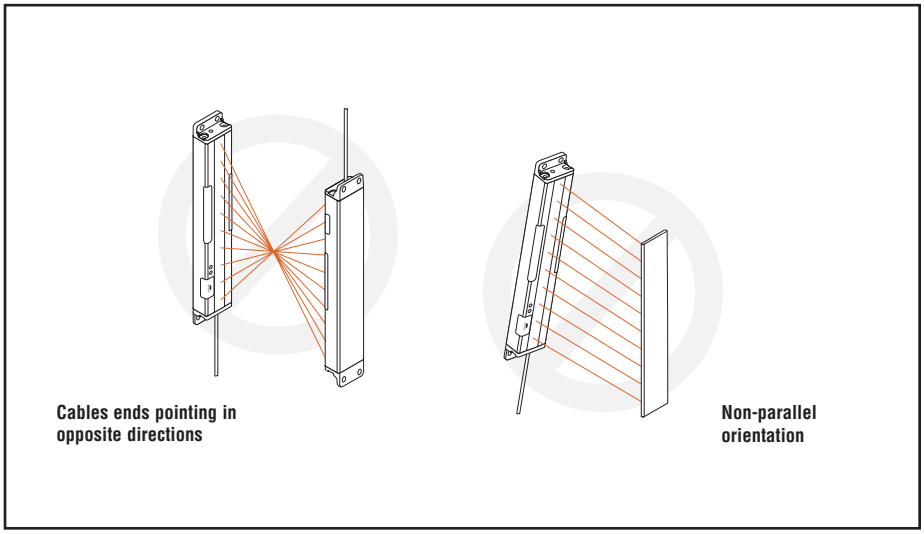

Figure 3. Improper orientation; emitter and receiver pairs should be mounted parallel, with both cable ends pointing the same direction.

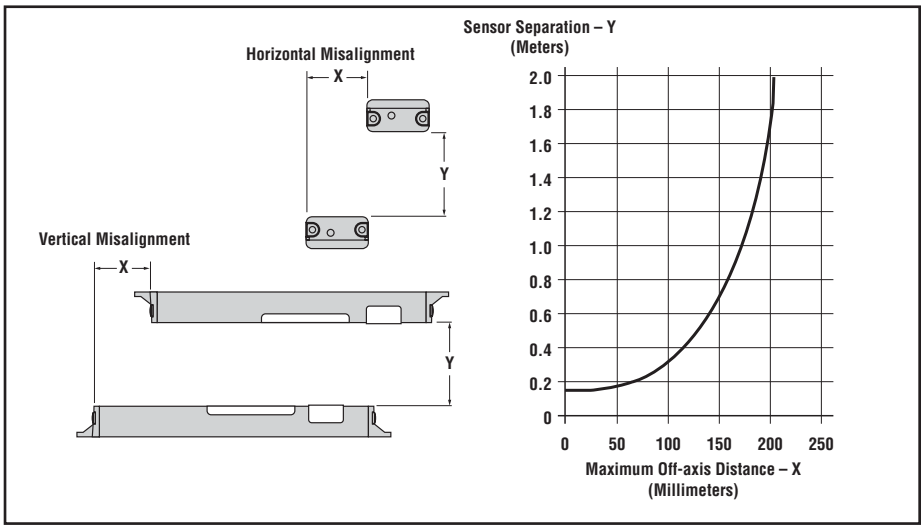

Figure 4. Maximum off-axis misalignment

Mounting

Banner PVA emitters and receivers are small, lightweight, and easy to handle during mounting. The wide beam pattern of these sensors simplifies their alignment. M4 stainless steel fasteners and two stainless steel brackets are included with each sensor.

Emitters and their corresponding receivers must be mounted parallel to one another in the same plane, with their cable ends pointing the same direction, and their tops and bottoms aligned. From a common point of reference, make measurements to locate the emitter and receiver in the same plane with their midpoints directly opposite each other. Mount the emitter and receiver brackets to the top and bottom of each sensor, as shown in Figure 4.

Mount the emitter and receiver in their brackets, being careful to position the red lenses of the two units directly facing each other. (Remember, the cable ends of both sensors must point in the same direction to ensure proper sensing.) Measure from one or more reference planes (for example, the building floor) to the same point(s) on the emitter and receiver to verify their mechanical alignment. (If the sensors are mounted exactly vertical or horizontal, a carpenter's level may be helpful. A straightedge or a string extended between the sensors may also be helpful.) Also check "by eye" for line-of-sight alignment. Make any necessary final mechanical adjustments, and hand-tighten the bracket hardware. After the electrical hookup is complete, check for beam alignment. If necessary, re-align the emitter and receiver at that time.

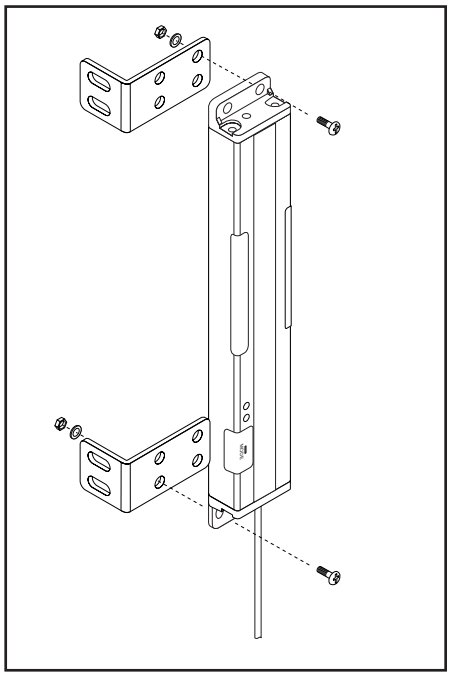

Figure 4. PVA emitter and receiver mounting hardware

Hookups

All models feature integral 2 m (6.5') long, 3.3 mm (0.13") dia. PVC-jacketed cables. Models whose model numbers end in "Q" are terminated with quick-disconnect (QD) Euro-style 4-pin connectors; other models have unterminated ends. For information on optional mating QD cables, see page 8.

Emitter with Unterminated Cable

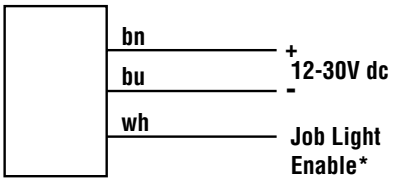

Emitter with Quick-Disconnect (4-Pin Euro-Style)

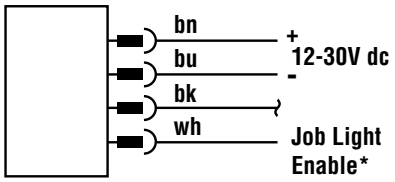

Receiver with NPN (Sinking) Output

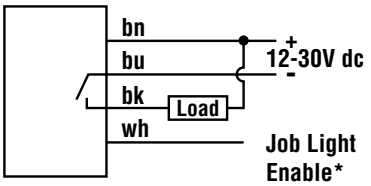

Receiver with PNP (Sourcing) Output

NOTE: Receiver hookups are functionally the same for either cabled or quick-disconnect models.

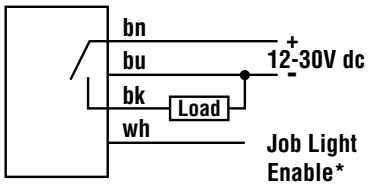

* See Programming information on page 7 for job light enable input requirements

NOTE: Blue wire (dc common) is internally connected to emitter and receiver housings.

Banner Engineering Corp. • Minneapolis, MN U.S.A.
www.bannerengineering.com • Tel: 763.544.3164

Programming

To program the PVA, set the DIP switches on the emitter and receiver as shown below. When setting DIP switches, use the little plastic screwdriver (supplied with each sensor) to avoid damaging the switches or causing a short circuit. See Figure 7 for switch cover removal information (next page). The switches determine 4 status operating modes:

- A/B frequency (to avoid crosstalk from multiple pairs of sensors),
- Light/dark operate,
- Solid/flashing job light (depending on assembler and/or supervisor preference), and
- Gate polarity.

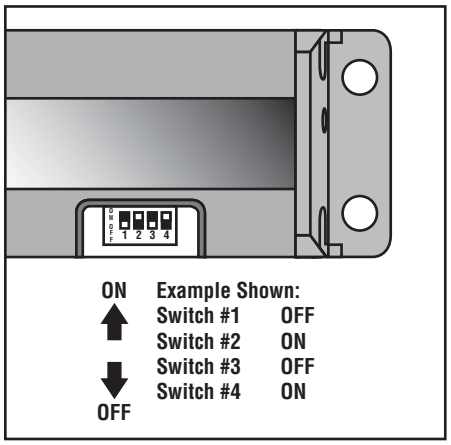

Figure 5. PVA configuration DIP switch setting positions

PVA Configuration DIP Switch Settings

Switch	Emitter	Receiver
1*	ON = Frequency A OFF = Frequency B	ON = Frequency A OFF = Frequency B
2	No function	ON = Light operate OFF = Dark operate
3	ON = Job light steady OFF = Job light flashes	ON = Job light steady OFF = Job light flashes
4	**Job light control input:** connect the white wire of the emitter and receiver as follows: **Models PVA...P6** ON = Job light ON for +5 to 30V dc (27K input impedance) OFF = Job light ON for 0 to 2V dc/open circuit **Models PVA...N6** ON = Job light ON for +5 to 30V dc/open circuit OFF = Job light ON for 0 to 2V dc (10K input impedance)	

*NOTE: Both emitter and receiver must be set to the same frequency in order to operate.

Status Indicators/Troubleshooting

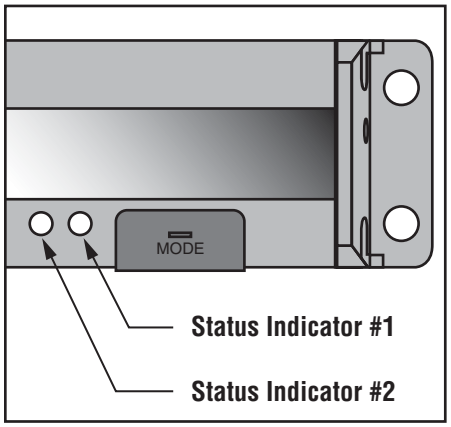

Figure 6. PVA sensor status indicators

	Status Indicator #1	Notes
Emitter	Unlit	Frequency A selected (Emitter/Receiver Switch #1 both ON)
Emitter	Steady Red	Frequency B selected (Emitter/Receiver Switch #1 both OFF)
	Status Indicator #2	**Notes**
Emitter	Steady Green	Power is ON and system is OK
Emitter	Unlit	Power is OFF
Emitter	Flashing Green 2x/sec	Emitter Failure (Try removing and reapplying power)

	Status Indicator #1	Notes
Receiver	Steady Yellow	Output is active (Changing Switch #2 to L.O. will turn the yellow indicator ON when the system is clear)
Receiver	Unlit	Output is inactive (Changing Switch #2 to D.O. will turn the yellow indicator ON when the system is blocked)
	Status Indicator #2	**Notes**
Receiver	Steady Green	Power is ON and system is OK
Receiver	Unlit	Power is OFF
Receiver	Flashing Green 1x/sec	Receiver Failure (Try removing and reapplying power)

PVA Series Parts Verification Array

Cover Removal

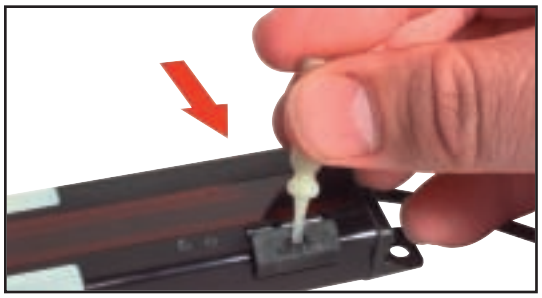

Figure 7. PVA cover removal

To remove the switch cover, insert a fingernail or small screwdriver into the slot (see Figure 7); apply gentle pressure, angling away from the sensor lens. The cover will remain tethered to the sensor housing.

Cover Replacement

Figure 8. Align edge of PVA cover

Figure 9. Press PVA cover into place

To replace the switch cover, align one edge of the cover with the edge of the sensor housing opening (Figure 8). Then press the front corners into place, as shown in Figure 9.

Accessories

Optional Brackets

NOTE: Basic mounting brackets are included with PVA System. See Figure 1, page 4.

SMBPVA2

- Set of 4 molded brackets
- Brackets snap onto 28 mm pipe
- Request data sheet P/N 54752 for more information

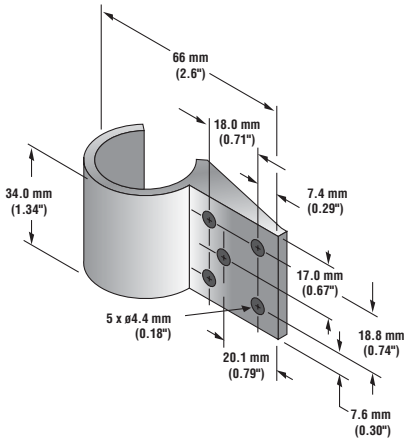

Heavy-duty protective brackets

- Set of 2
- Cold-rolled steel, zinc finish
- Models with suffix "AB" allow no access to DIP switches

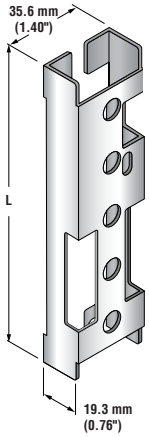

(model SMBPVA..B shown)

Model		Used With	L
DIP Switch Access Port	No DIP Switch Access		
SMBPVA5B	SMBPVA5AB	PVA100	139.7 mm
SMBPVA10B	SMBPVA10AB	PVA225	268.2 mm
SMBPVA13B	SMBPVA13AB	PVA300	343.3 mm
SMBPVA16B	SMBPVA16AB	PVA375	418.2 mm

Euro-Style Quick-Disconnect Cables

Cable: PVC jacket, polyurethane connector body, nickel-plated brass coupling nut
Conductors: 22 or 20 AWG high-flex stranded, PVC insulation, gold-plated contacts
Temperature: -40° to +90°C (-40° to +194°F)
Voltage Rating: 250V ac/300V dc

Style	Model	Length	Dimensions	Pin-out
4-Pin Straight	**MQDC-406** **MQDC-415** **MQDC-430**	2 m (6.5') 5 m (15') 9 m (30')	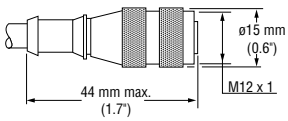	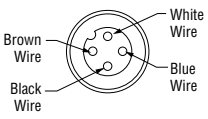

WARRANTY: Banner Engineering Corp. warrants its products to be free from defects for one year. Banner Engineering Corp. will repair or replace, free of charge, any product of its manufacture found to be defective at the time it is returned to the factory during the warranty period. This warranty does not cover damage or liability for the improper application of Banner products. This warranty is in lieu of any other warranty, either expressed or implied.

P/N 52088 rev. D